Snatch block with hook

Features

- Steel body.
- Quick rope installation due to hinged design.
- With swivel load hook.
- Permanently lubricated pin bearing.
- Safety design: Side plate cannot be opened under load.
- Complies with the Machinery Directive 2006/42/EC. Supplied with test certificate, CE declaration of conformity and operating instructions.

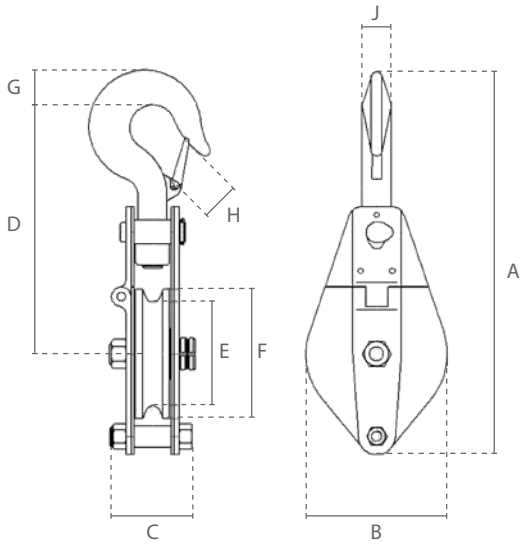

Specifications			
Article code	Capacity	Max. cable diameter	Net weight
	ton	mm	kg
SG.0.KB.0500	0,500	5	2,3
SG.0.KB.1000	1,000	7	3,8
SG.0.KB.2000	2,000	13	7,3
SG.0.KB.3200	3,200	15	13,5
SG.0.KB.6400	6,400	18	22

Dimensions (mm)									
Capacity	A	B	C	D	E	F	G	H	J
0,500	261	99	75	173	75	88	21	19	19
1,000	310	117	84	205	85	105	23	26	20
2,000	425	200	92	263	150	190	30	27	24
3,200	496	230	108	295	180	220	40	31	28
6,400	655	270	116	375	260	300	47	42	35

Subject to changes without notice. Illustrations for reference only. Always obey the operating instructions.
2025 © DELTA® Hoisting Equipment E1205251228