DELTA YELLOW®

Lever hoist

Features

- Maintenance friendly design. Brake and transmission are easy to access.
- Measurement points on the hooks.
- Precision machined shafts, chain sprocket and gears ensure smooth operation.
- Ergonomic lever with rubber sleeve.
- Optimised load chain guidance system.
- High strength double casing provides protection against dust and water.
- Durable cast steel hand wheel and selection switch.
- Robust housing endures external shock without damage to the bearing alignment.
- Free spooling mode.
- Complies with the Machinery Directive 2006/42/EC. Supplied with test certificate, CE declaration of conformity and operating instructions.

Specifications							
Article code	Capacity	Chain falls	Load chain	Effort for max load	Lever turns for 1m lift	Net weight	Extra weight
	ton		Øxmm	N		kg *	kg/m **
DY.0.0540750	0,750	1	6 x 18	140	51	5,1	0,8
DY.0.0541500	1,500	1	8 x 24	240	47	8,9	1,5
DY.0.0543000	3,000	1	10 x 30	320	60	15,4	2,2
DY.0.0546000	6,000	2	10 x 30	340	120	23,4	4,4
DY.0.0549000	9,000	3	10 x 30	360	179	31,3	6,6

* without load chain ** per meter lifting height

Specifications	
Hooks	Drop-forged steel hooks with cast latch
Load chain	Galvanized load chain according to EN 818-7-T
Operating temperature	-10°C - +60°C
ATEX zone	Not suitable
Load type	Goods, may not be used to lift or transport people

Protection	
Overload protection	No overload protection
Brake	Automatic safety load brake with twin friction discs and pawls

Subject to changes without notice. Illustrations for reference only. Always obey the operating instructions.
2025 © DELTA® Hoisting Equipment E1205251447

DELTA®

CE

DELTA RED® VS DELTA YELLOW® VS DELTA ALUM®

Corrosion resistant, caged cylindrical roller bearings for heavy-duty applications

Extremely durable steel brake disc with sintered brake pads

Standard brake disc

High-quality cast safety latches

Enhanced free spooling mode (pull out hand wheel)

No minimum preload required to activate the brake

Premium

Compact lever

Available with slip clutch overload protection

Subject to changes without notice. Illustrations for reference only. Always obey the operating instructions.
2025 © DELTA® Hoisting Equipment E1205251149

Lever hoist dimensions

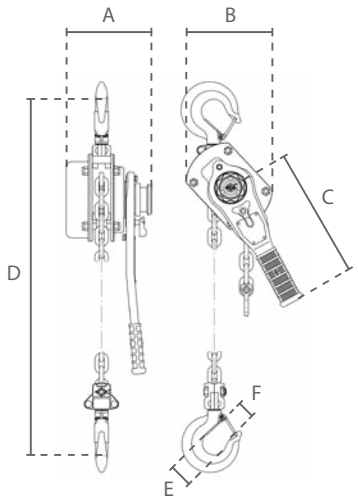

0,75 - 3 ton

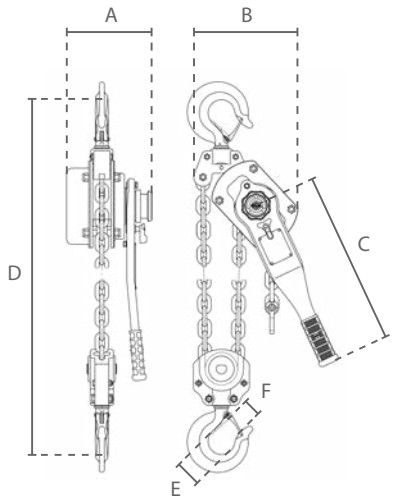

6 ton

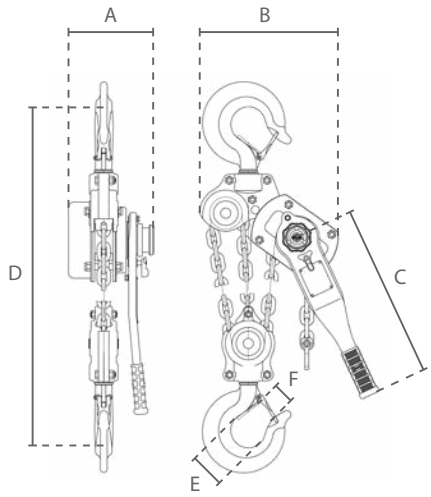

9 ton

DELTA RED®

Capacity		Chain falls	Dimensions (mm)					
ton	kN		A	B	C	D	E	F
0,800		1	160	133	250	320	38	26
1,600	30	1	182	157	270	365	48	29
3,200	60	1	208	210	430	490	58	39
6,300		2	208	253	430	583	65	43
9,000		3	208	338	430	830	85	58

DELTA YELLOW®

Capacity (ton)	Chain falls	Dimensions (mm)					
		A	B	C	D	E	F
0,750	1	148	135	290	320	37	26
1,500	1	176	162	420	380	45	33
3,000	1	195	211	420	480	50	38
6,000	2	195	254	420	620	64	48
9,000	3	195	319	420	700	85	50

Subject to changes without notice. Illustrations for reference only. Always obey the operating instructions.
2025 © DELTA® Hoisting Equipment E1205251151