Electric chain hoist DMS

Features

- Robust housing made of aluminium. Housing covers made of steel.
- Suitable for a wide range of industrial applications.
- Swivel load hook with safety latch.
- Easy to disassemble for maintenance purposes.
- Control system with SCHNEIDER relays.
- Permanently lubricated transmission, ensures smooth and quiet operation.
- Supplied with control switch, power cable and chain container.
- Complies with the Machinery Directive 2006/42/EC. Supplied with test certificate, CE declaration of conformity and operating instructions.

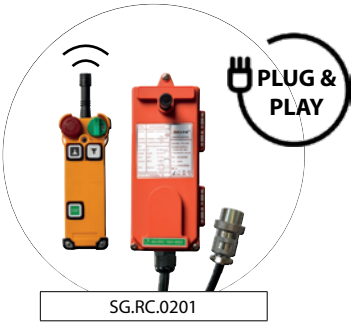

SG.RC.0201

Specifications							
Article code	Capacity	Lifting speed	Load chain	Chain falls	Power output	Net weight	Extra weight
	ton	m/min	Øxmm		kW	kg	kg/m
SG.0.DMS.00501	0,500	7,6	6,3 x 19	1	1,2	54	0,86
SG.0.DMS.01001	1,000	5	8 x 24	1	1,2	56	1,4
SG.0.DMS.02201	2,000	2,5	8 x 24	2	1,2	62	2,8

Specifications	
Operating voltage	230V / 50Hz / 1Ph = SG.0.DMS.XXXXX 110V / 50Hz / 1Ph = SG.0.DMS110.XXXXX
Lifting speed	Single speed
Load chain	Galvanised RUD® load chain according to EN 818-7-DAT/DT
Control cable	Standard lengths supplied to match the lifting height. With plug connection.
Power cable	1 meter without plug
Housing protection	IP 55
Control protection	IP 65
Classification	M5/2m (ISO/FEM)
Duty cycle / Starts per hour	40% / 240
Insulation class	F
Operating temperature	-10°C - +40°C
Load type	Goods, may not be used to lift or transport people

Protection	
Control switch	24V pendant control with emergency stop
Overload protection	Adjustable slip clutch
Brake	Electromagnetic spring pressure brake, holds the load in the event of power failure
Limit switch	Electro-mechanical upper and lower limit switch

Subject to changes without notice. Illustrations for reference only. Always obey the operating instructions.
2025 © DELTA® Hoisting Equipment E1205251044

Electric chain hoist DMS

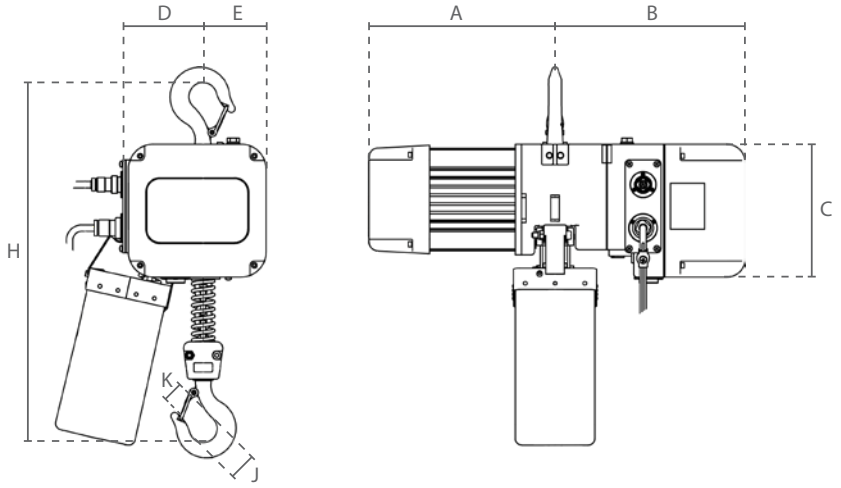

Dimensions (mm)								
Article code	A	B	C	D	E	H	J	K
SG.0.DMS.00501	389	353	214	142	102	443	40	25
SG.0.DMS.01001	389	353	214	142	102	533	45	31
SG.0.DMS.02201	389	353	214	142	102	702	53	38

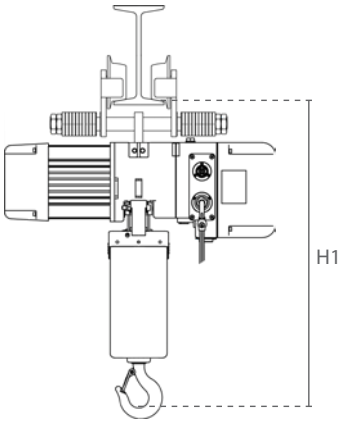

Features

- Electric chain hoist mounted on low headroom trolley.
- Balance support wheels enable smooth travelling along the beam.
- Safety bars serve as fall-, breaking- and impact protection. Additionally equipped with tilting protection.
- Permanently lubricated, ball bearing mounted wheels allow for smooth traversing.
- Suitable for most I- and H-beam profiles.

Specifications					
Article code	Capacity	Chain falls	Beam width	Net weight	Min. height (H1)
	ton		mm	kg	mm
SG.0.DMY.00501	0,500	1	74-300	70	480
SG.0.DMY.01001	1,000	1	74-300	72	510
SG.0.DMY.02201	2,000	2	74-300	78	695

Subject to changes without notice. Illustrations for reference only. Always obey the operating instructions.
2025 © DELTA® Hoisting Equipment E1205251044

Electric chain hoist comparison 230V

	Capacity (ton)	Chain falls	Premium DH.0.DMH	SG.0.DMS	CZ.0.US
Lifting speed m/min	0,250	1	7 / 1,8	-	-
	0,500	2	3,5 / 0,9	-	-
		1	7 / 1,8	7,6	5
	1,000	2	3,5 / 0,9	-	2,5
		1	-	5	4
	2,000	2	-	2,5	2
Net weight kg	0,250	1	24	-	-
	0,500	2	25	-	-
		1	36	54	16
	1,000	2	37	-	17
		1	-	56	26
	2,000	2	-	62	31
Available with	mounted push trolley		✓	✓	✗
	plug&play radio remote control		✓	✓	✓
	eye suspension		✓	✗	✗

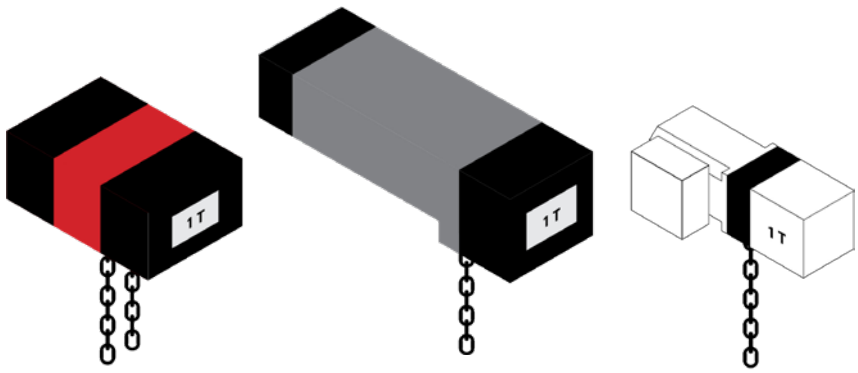

Voltage	110-230V	230V / 110V	
Motor	Brushless motor		Carbon brush motor
Housing protection	IP 55		IP 54
Classification	M5/2m		M4/1Am
Duty cycle	40%		30%
Control voltage	24V		230V
Overload protection	Slip clutch		
Limit switch	Micro switch for highest and lowest position		-
Load chain	RUD		

Subject to changes without notice. Illustrations for reference only. Always obey the operating instructions.
2025 © DELTA® Hoisting Equipment E0705251754